DRAWING # 34

MAJESTIC SERIES HORIZONTAL HEADWALL SYSTEM

SINGLE TIER with NO CHASE
(M/N: HW00-01T-P-048M)

TYPE:
QUANTITY:

SYSTEM DETAILS		
SYMBOL	QTY.	DESCRIPTION
HC	2	HORIZONTAL EQUIP. TRACK
N2	1	RECEPTACLE - DUPLEX IVORY
E2	1	RECEPTACLE - DUPLEX RED
NC	1	PROVISION - NURSE CALL
SLM	2	VACUUM SLIDE, ON TRACK
O	1	GAS, OXYGEN
A	1	GAS, MED AIR
V	2	GAS, VACUUM

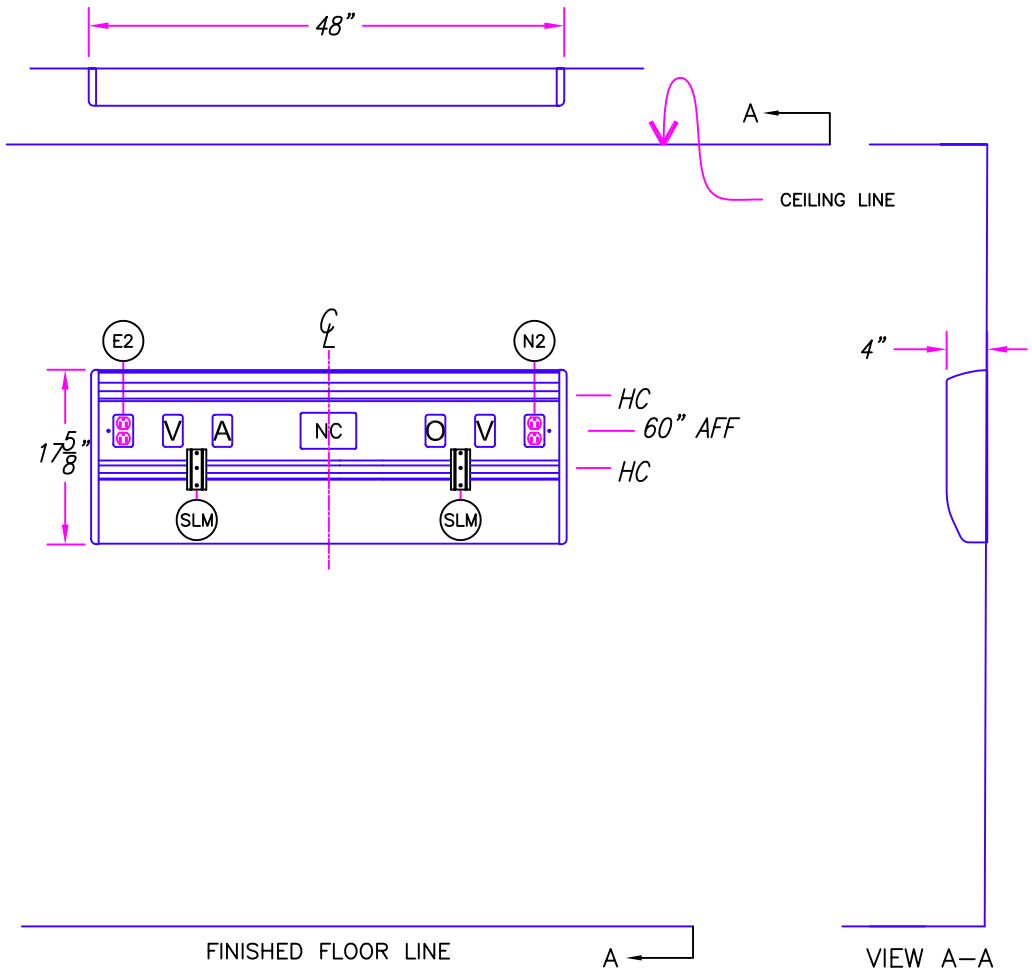

IMPORTANT: PLEASE VERIFY THAT THE ABOVE INFORMATION IS CORRECT, AND PROVIDE THE REMAINING DETAILS.

APPROVAL - PRINT AND SIGNATURE _____ DATE _____ PHONE NO. _____

AMICO Corporation
85 Fulton Way
Richmond Hill, Ontario
L4B 2N4, CANADA
Toll-Free: 1-877-462-6426(T)
1-866-440-4986(F)
Tel: (905) 764-0800
Fax: (905) 764-0862
www.amico.com

HOSPITAL

LOCATION

QTY. (____) TYPE ____ UNITS AS SHOWN / (____) TYPE ____ UNITS OPPOSITE

A. NURSE CALL MFGR: _____ MODEL NO.: _____

B. MEDICAL GAS MFGR.: _____ TYPE CONNECTION: _____

C. FINISH: _____ CEILING HEIGHT: _____

DRWG. NO.
PRICEBOOK-34
DRAWN BY:CS
CHECKED BY:CS
REV.NO.:
DATE: